ZKONG

Electronic Shelf Label Series



13.3" Dot Matrix EPD Graphic Screen ESL

ZKC133E-E

PRODUCT DATASHEET

PRODUCT FEATURES

Cloud-managed | Full - colors | Pricing in Seconds | 2-year Battery | Strategic Pricing | Bluetooth LE 5.1

TECH SPECIFICATION

EXAMPLARY PICTURE

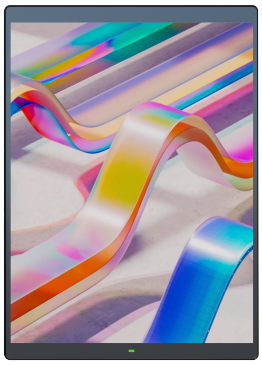

TECHNICAL DRAWINGS (mm)

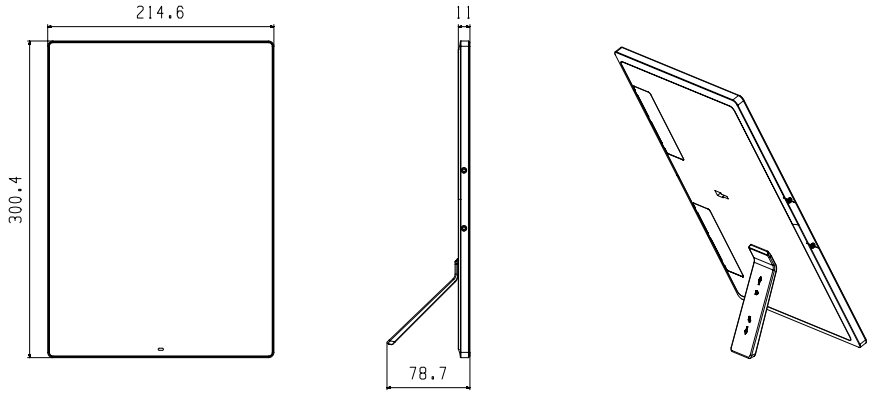

Display Features

Display Technology	Dot Matrix EPD Graphic Screen
Active Display Area(mm)	270.4*202.8mm
Resolution（Pixels）	1600*1200
Pixel Density (DPI)	150
Pixel Colors	Full - colors
Viewing Angle	Nearly 180°
Usable Pages	6

Wireless

Operating Frequency	2.4-2.485GHz
Standard	BLE 5.1
Encryption	128-bit AES
OTA	YES

Battery

Battery	2*CP302575
Battery Life	2 years（2 updates/day）
Battery Capacity	2800mAh

Physical Features

NFC	Yes
Operating Temperature	0~40°C
Dimensions	300.4*214.6*11 mm
Packaging Unit	20 Labels/box

Compliance

Certification	CE,ROHS,FCC