Rev	Change	Date	Int.

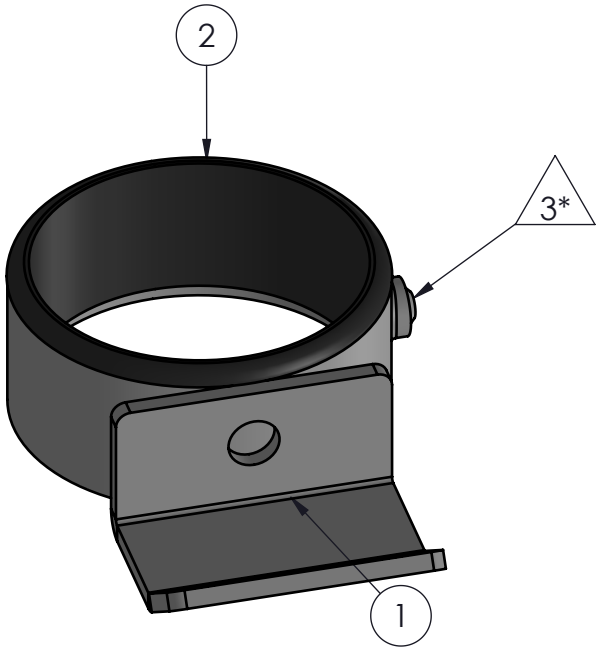

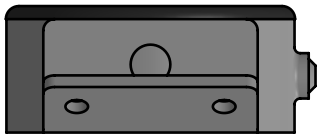

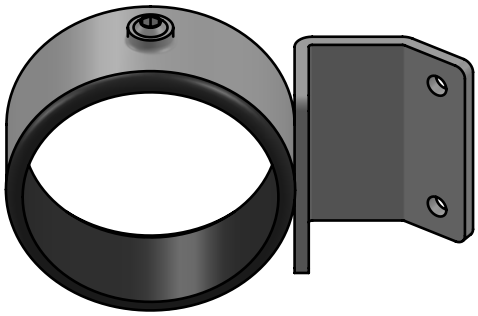

POS	PARTNUMBER	SP2-C4400026_S1	DESCRIPTION
1	SP2-C4400026U	1	Mounting bracket38X66 mm for POSIFLEX Display
2	SP2-P22100-02	1	Short plastic sleeve, SP2
3	M9915-0606	1	Grub screw M6x6mm with hex hole

*SELECT VARIANT

See triangular balloon & parts list

Description
SP2, Lock Ring with mounting flange for POSIFLEX
Fits a 19690117013 POSIFLEX bracket

Category	Weight	Revision
Customer display adapters	0.10 kg	A

COPYRIGHT © ERGONOMIC SOLUTIONS 2020
www.ergonomic.solutions

Size: A4	Name	Date
Drawn	pl	20-03-2015
Last Update	per.krabbe	12-02-2018

Unless otherwise specified tolerances according to ISO 2768-m
All dimensions are in millimeters

1st Angle Projection

Drawing No
SP2-C4400026